IM0004-1 (Table of contents)

Number	Title
1	Table of Contents
2	Power Distribution
3	PLC Inputs
4	PLC Analogues
5	PLC Outputs
6	PLC Actuators
7	Terminal Layout Rear
8	Terminal Layout Front
9	Connector Layout
10	Network
11	Parts List
12	Back Panel Wiring

Rev.	Date	Description	Appd. by	Status
1	02/06/2025	Cable Diameter Change	HA	Closed
A	03/05/2025	Initial Release	HA	Closed

Prj: IM0004-1

Prj nb: IM0004

Title: Table of Contents

Sheet nb. 1 of 12

Desg. by: HA

Matrix TSL

33 Gibbet Street
Halifax, UK
sales@matrixtsl.com
01422 252380

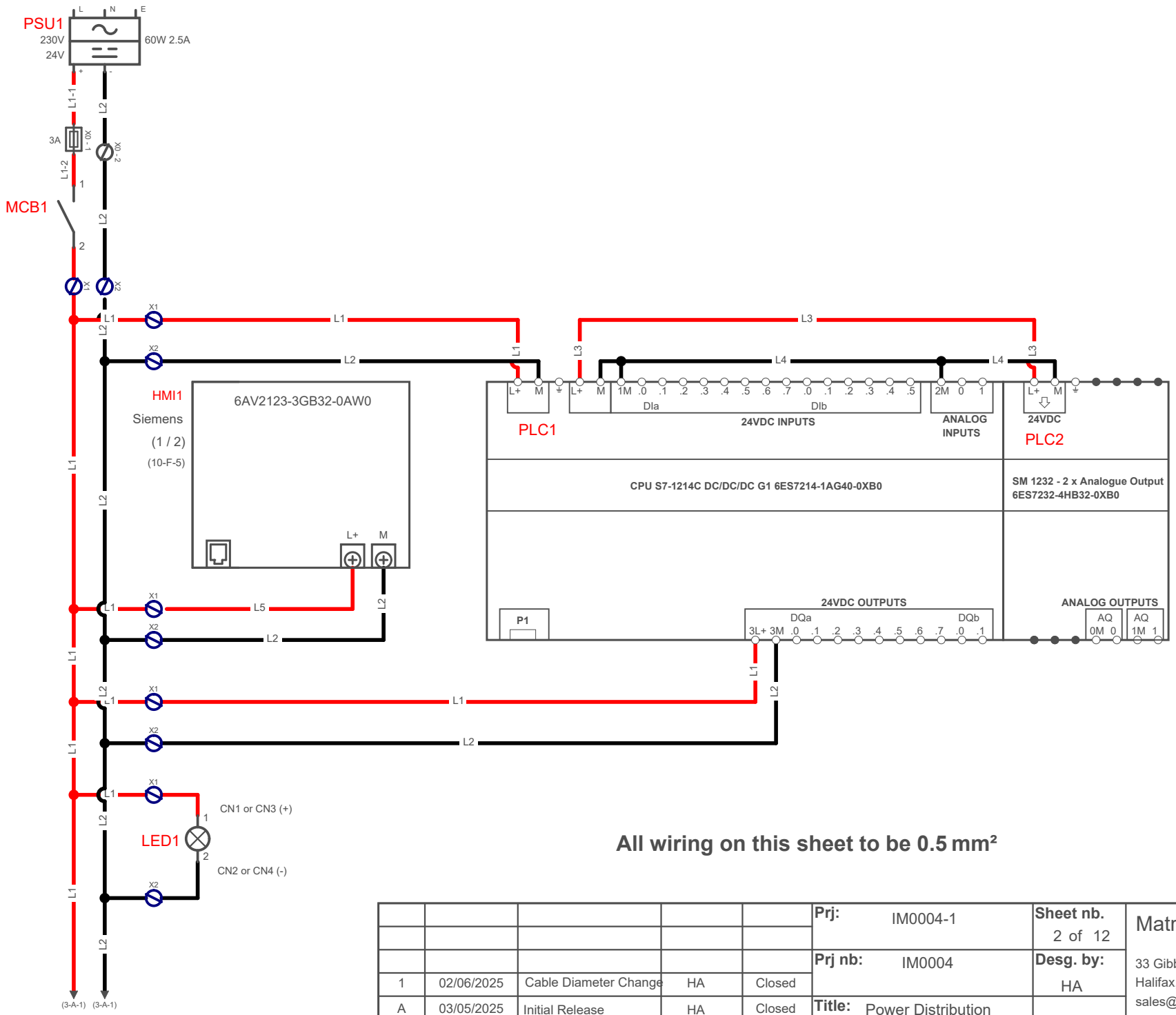

All wiring on this sheet to be 0.5 mm²

Rev.	Date	Description	Appd. by	Status
1	02/06/2025	Cable Diameter Change	HA	Closed
A	03/05/2025	Initial Release	HA	Closed

Prj:	IM0004-1
Prj nb:	IM0004
Title:	Power Distribution
Sheet nb.	2 of 12
Desg. by:	HA

Matrix TSL
33 Gibbet Street
Halifax, UK
sales@matrixtsl.com
01422 252380

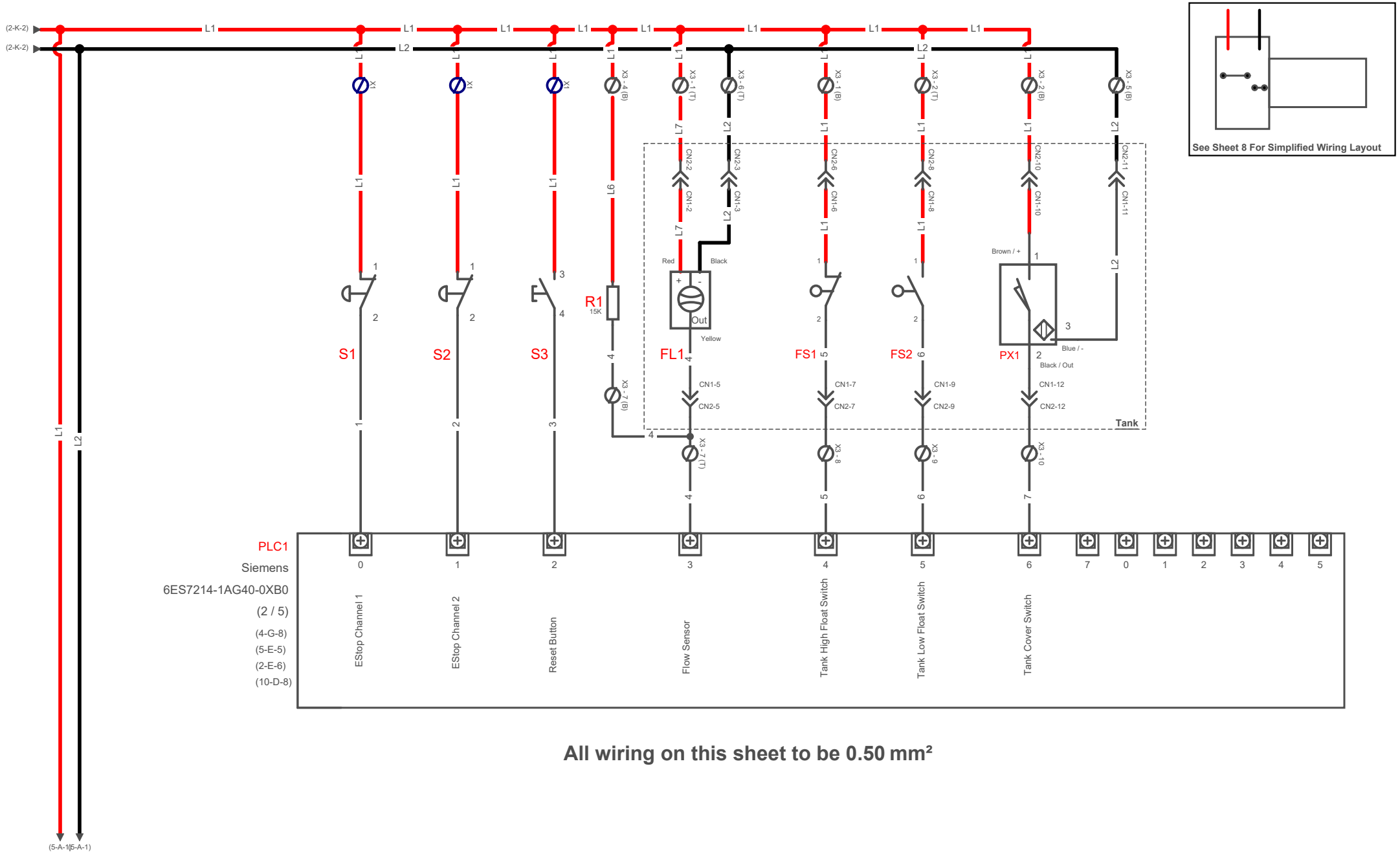

All wiring on this sheet to be 0.50 mm²

Rev.	Date	Description	Appd. by	Status
1	02/06/2025	Cable Diameter Change	HA	Closed
A	03/05/2025	Initial Release	HA	Closed

Prj: IM0004-1

Prj nb: IM0004

Title: PLC Inputs

Sheet nb. 3 of 12

Desg. by: HA

Matrix TSL
33 Gibbet Street
Halifax, UK
sales@matrixtsl.com
01422 252380

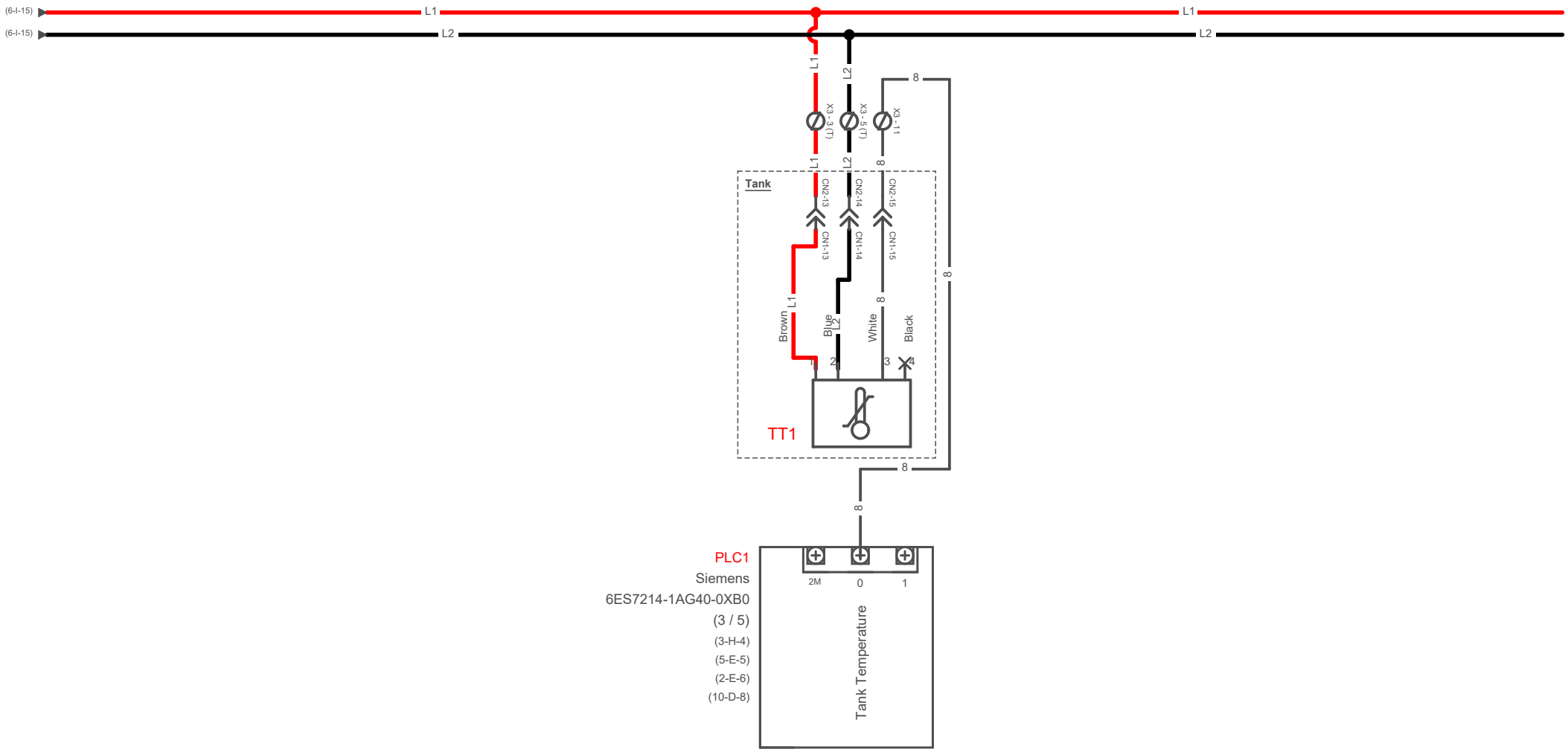

All wiring on this sheet to be 0.50 mm²

Rev.	Date	Description	Appd. by	Status
1	02/06/2025	Cable Diameter Change	HA	Closed
A	03/05/2025	Initial Release	HA	Closed

Prj: IM0004-1

Prj nb: IM0004

Title: PLC Analogues

Sheet nb. 4 of 12

Desg. by: HA

Matrix TSL
33 Gibbet Street
Halifax, UK
sales@matrixtsl.com
01422 252380

All wiring on this sheet to be 0.50 mm²

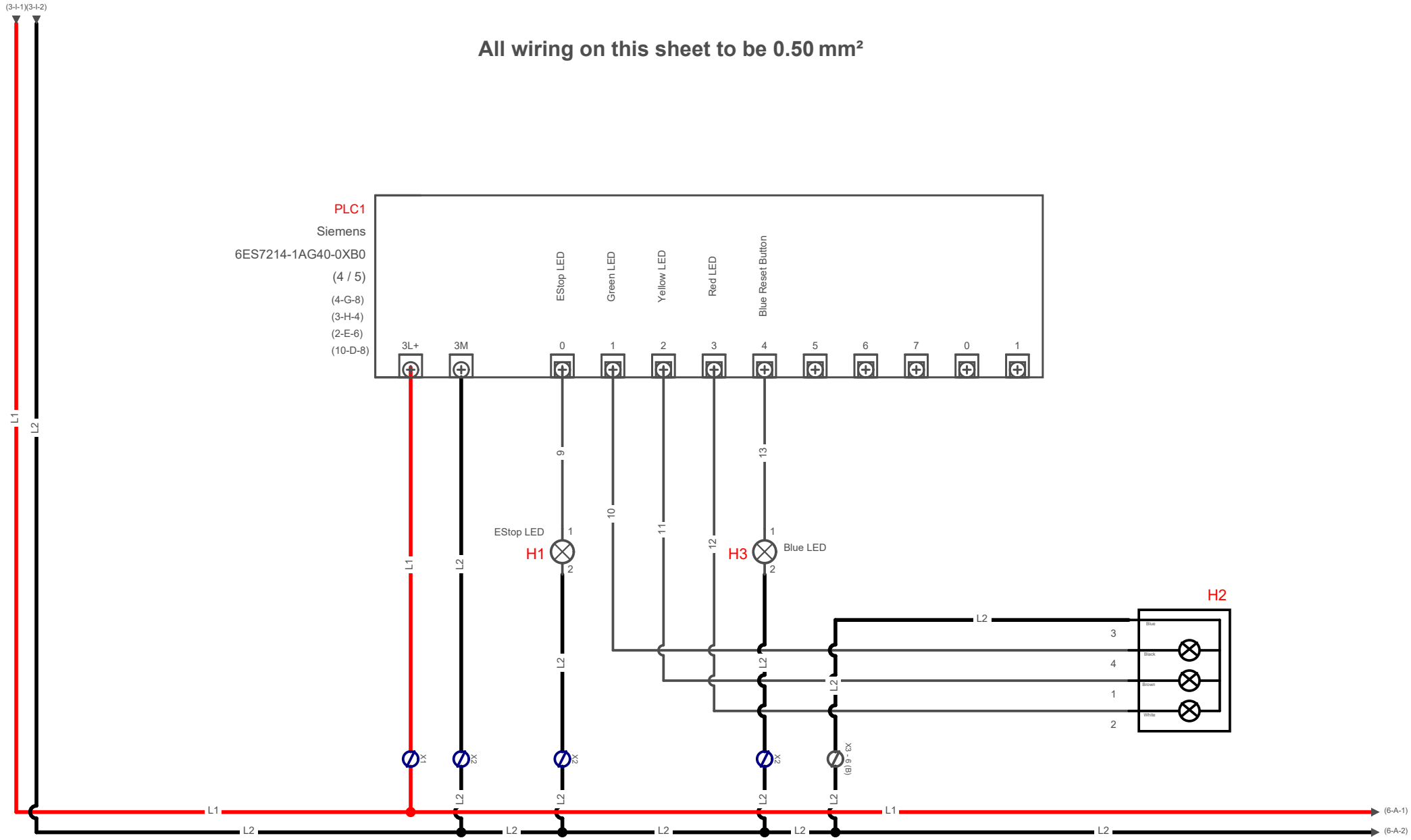

Rev.	Date	Description	Appd. by	Status
1	02/06/2025	Cable Diameter Change	HA	Closed
A	03/05/2025	Initial Release	HA	Closed

Prj: IM0004-1

Prj nb: IM0004

Title: PLC Outputs

Sheet nb. 5 of 12

Desg. by: HA

Matrix TSL

33 Gibbet Street
Halifax, UK
sales@matrixtsl.com
01422 252380

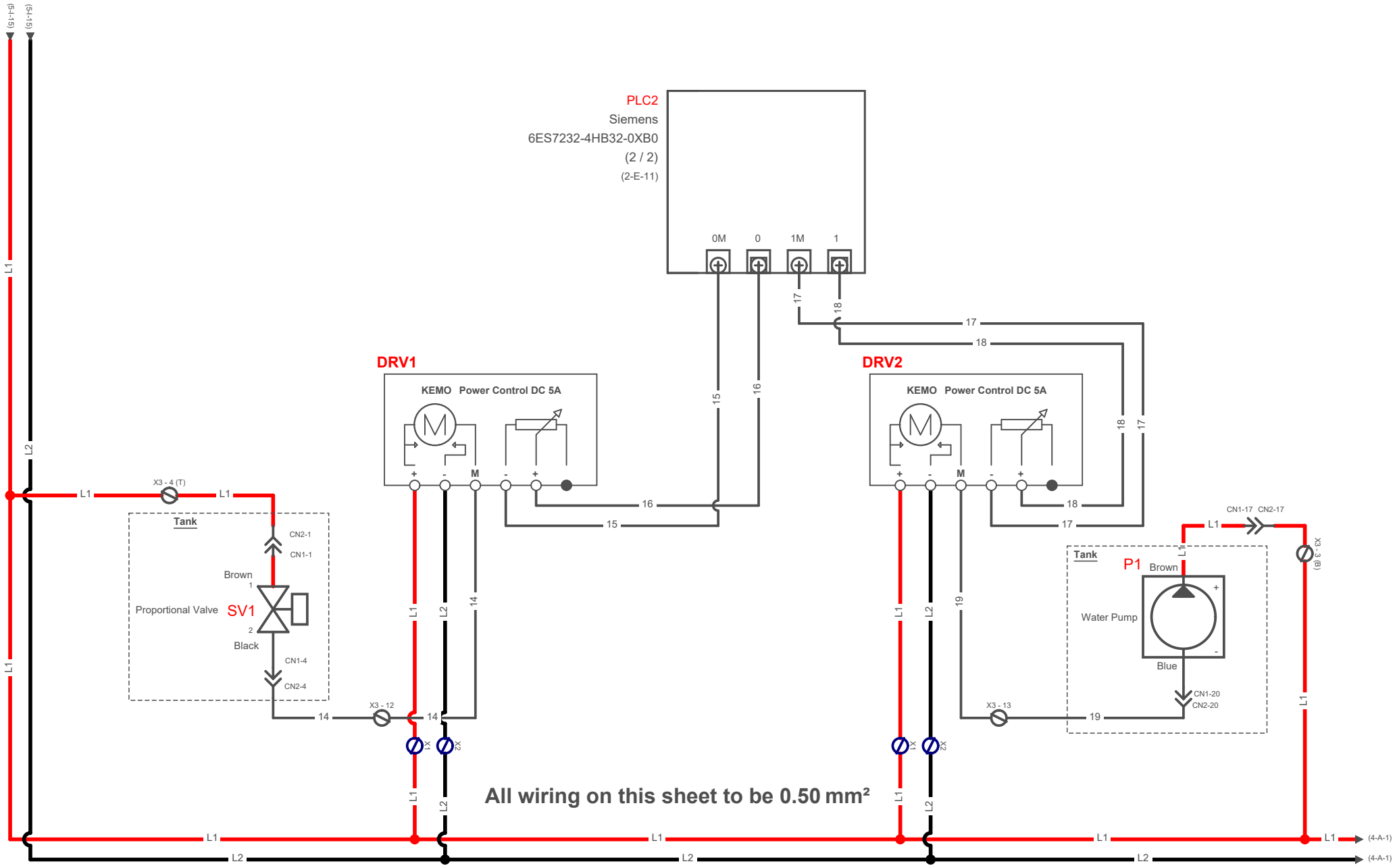

Rev.	Date	Description	Appd. by	Status
1	02/06/2025	Cable Diameter Change	HA	Closed
A	03/05/2025	Initial Release	HA	Closed

Prj: IM0004-1

Prj nb: IM0004

Title: PLC Actuators

Sheet nb. 6 of 12

Desg. by: HA

Matrix TSL
33 Gibbet Street
Halifax, UK
sales@matrixtsl.com
01422 252380

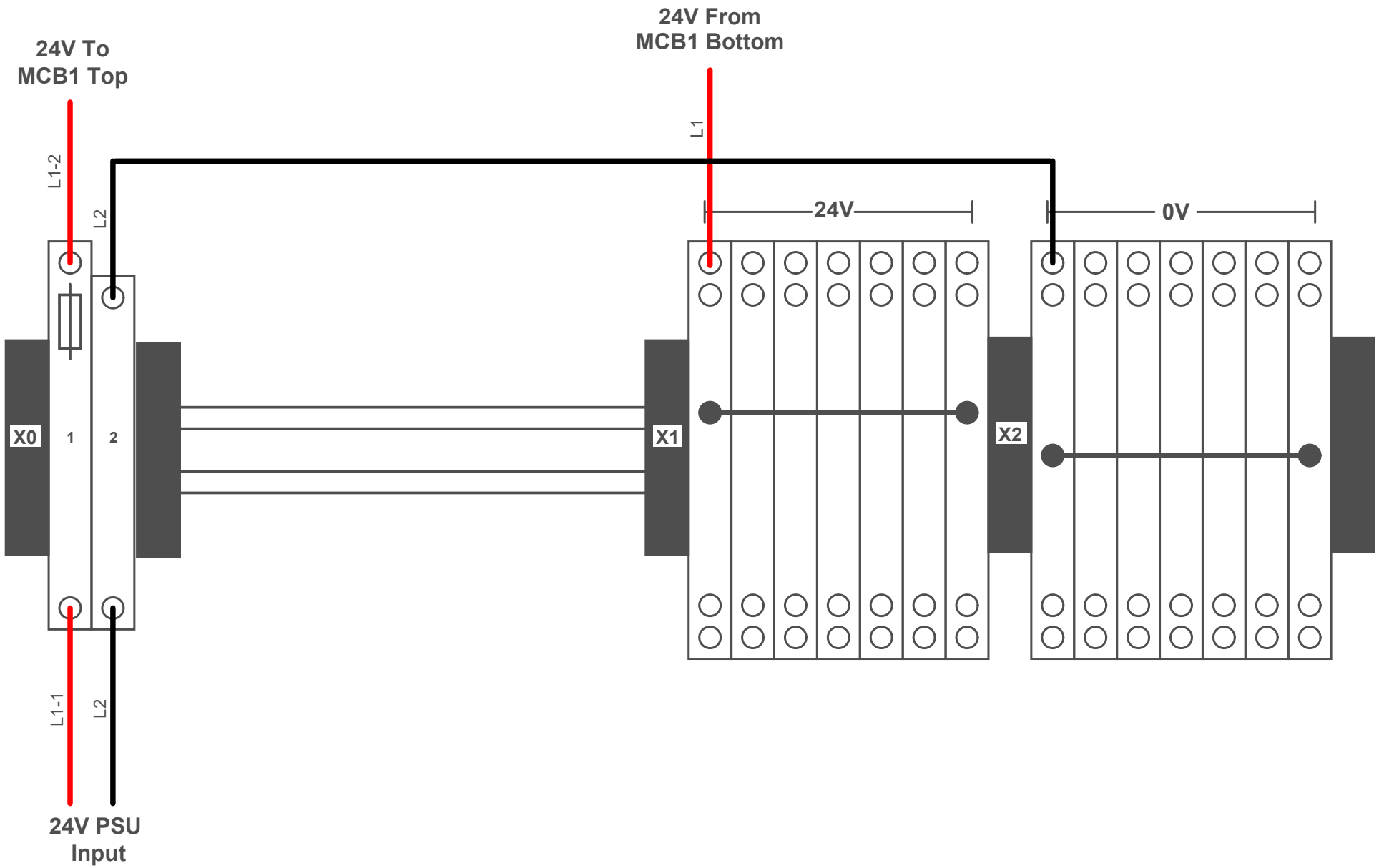

Rev.	Date	Description	Appd. by	Status
1	02/06/2025	Cable Diameter Change	HA	Closed
A	03/05/2025	Initial Release	HA	Closed

Prj: IM0004-1

Prj nb: IM0004

Title: Terminal Layout Rear

Sheet nb. 7 of 12

Desg. by: HA

Matrix TSL
33 Gibbet Street
Halifax, UK
sales@matrixtsl.com
01422 252380

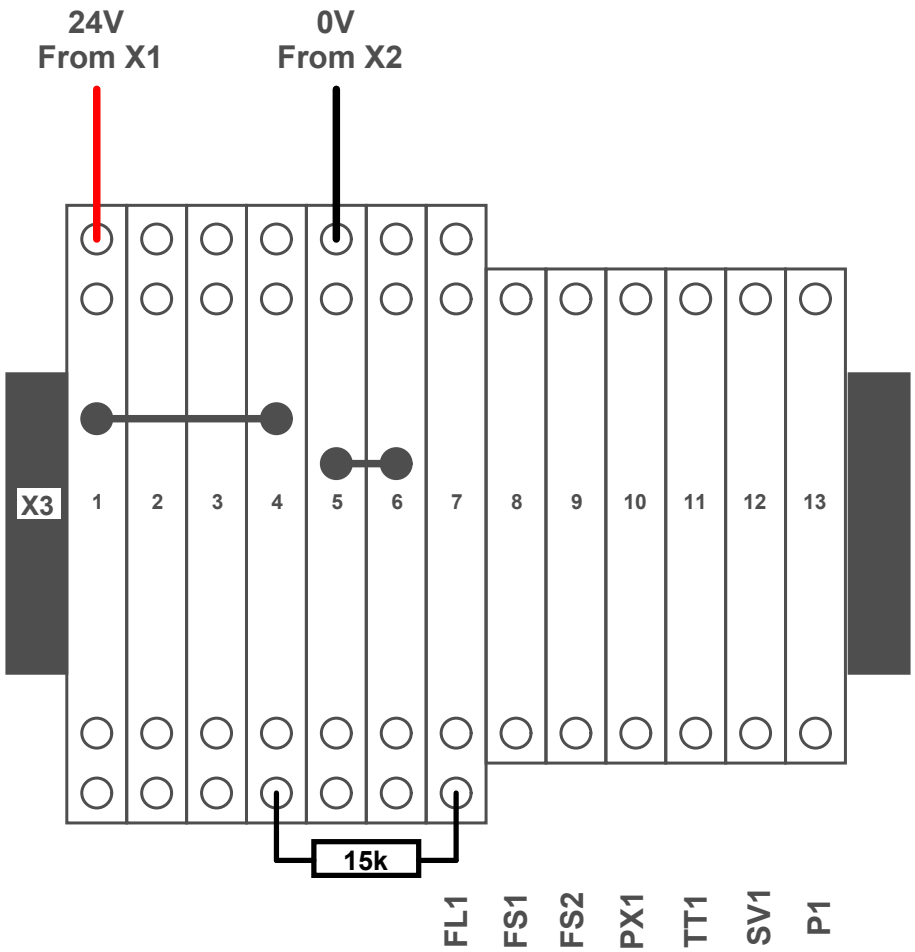

Rev.	Date	Description	Appd. by	Status
1	02/06/2025	Cable Diameter Change	HA	Closed
A	03/05/2025	Initial Release	HA	Closed

Prj: IM0004-1

Prj nb: IM0004

Title: Terminal Layout Front

Sheet nb. 8 of 12

Desg. by: HA

Matrix TSL
33 Gibbet Street
Halifax, UK
sales@matrixtsl.com
01422 252380

Pin 1: X3-4
Pin 2: X3-1(T)
Pin 3: X3-6
Pin 4: X3-12
Pin 5: X3-7
Pin 6: X3-1(B)
Pin 7: X3-8
Pin 8: X3-2(T)
Pin 9: X3-9
Pin 10: X3-2(B)
Pin 11: X3-5(B)
Pin 12: X3-10
Pin 13: X3-3(T)
Pin 14: X3-5(T)
Pin 15: X3-11
Pin 16: spare
Pin 17: X3-3(B)
Pin 18: spare
Pin 19: spare
Pin 20: X3-13

Female CN1

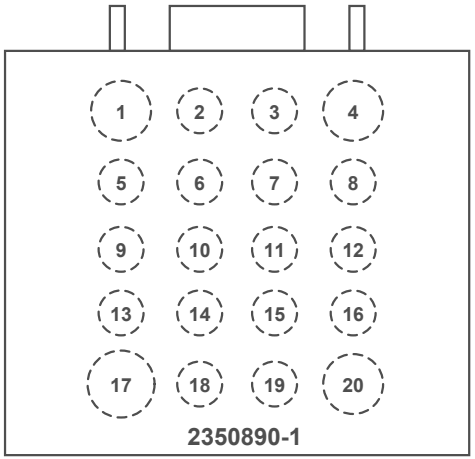

Male CN2

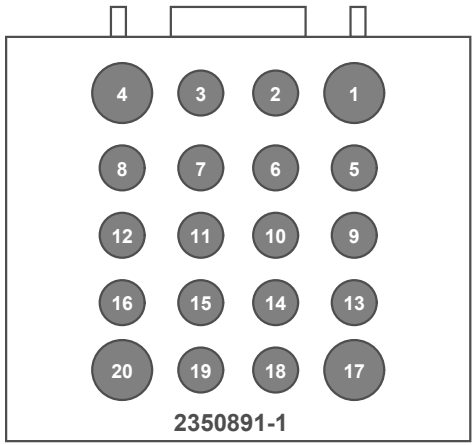

Pin 1: SV1 (+) BRN - Valve
Pin 2: FL1 (+) RED - Flow Sensor
Pin 3: FL1 (-) BLK - Flow Sensor
Pin 4: SV1 (-) BLU - Valve
Pin 5: FL1 (Out) YEL - Flow Sensor
Pin 6: FS1 (1) BLK - Float Sensor
Pin 7: FS1 (2) BLK - Float Sensor
Pin 8: FS2 (1) WHT - Float Sensor
Pin 9: FS2 (2) WHT - Float Sensor
Pin 10: PX1 (+) BRN - Proxy Sensor
Pin 11: PX1 (-) BLU - Proxy Sensor
Pin 12: PX1 (Out) BLK - Proxy Sensor
Pin 13: TT1 (+) BRN - Temp Sensor
Pin 14: TT1 (-) BLU - Temp Sensor
Pin 15: TT1 (Out) WHT - Temp Sensor
Pin 16: spare
Pin 17: P1 (+) BRN - Pump
Pin 18: spare
Pin 19: spare
Pin 20: P1 (-) BLU - Pump

Rev.	Date	Description	Appd. by	Status
1	02/06/2025	Cable Diameter Change	HA	Closed
A	03/05/2025	Initial Release	HA	Closed

Prj: IM0004-1
Prj nb: IM0004
Title: Connector Layout
Sheet nb. 9 of 12
Desg. by: HA

Matrix TSL
33 Gibbet Street
Halifax, UK
sales@matrixtsl.com
01422 252380

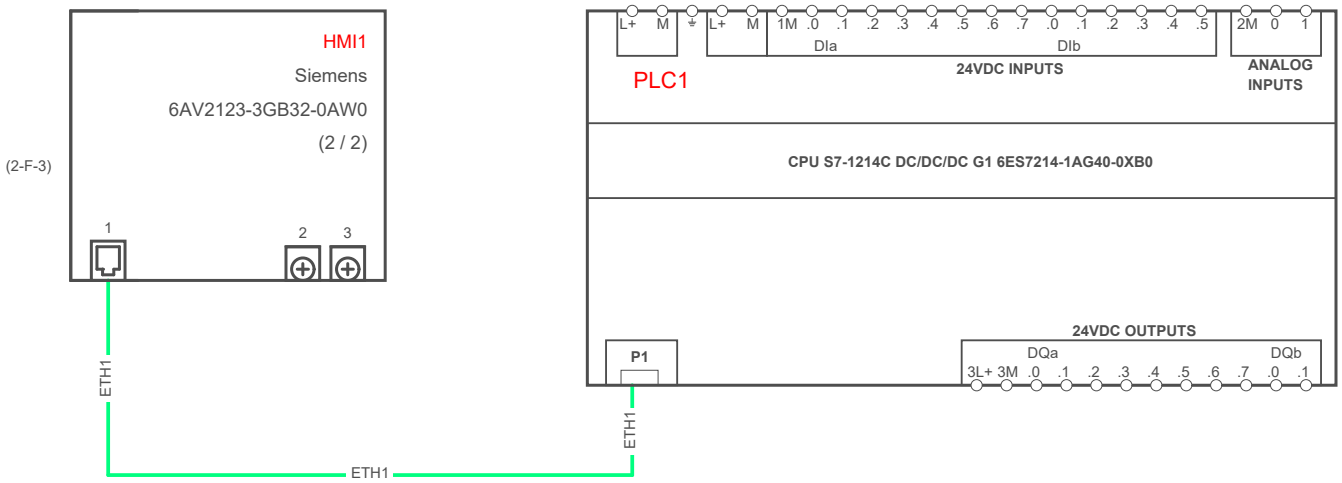

Rev.	Date	Description	Appd. by	Status
1	02/06/2025	Cable Diameter Change	HA	Closed
A	03/05/2025	Initial Release	HA	Closed

Prj: IM0004-1

Prj nb: IM0004

Title: Network

Sheet nb. 10 of 12

Desg. by: HA

Matrix TSL
33 Gibbet Street
Halifax, UK
sales@matrixtsl.com
01422 252380

IM0004-1 (Parts list)

Reference	Class name	Description	Manufacturer	Part number	Quantity
CN1	Connector	Male NTSEAL Automotive Connector Socket Cable Mount 20 Way, Solder Termination	TE Connectivity	2350891-1	1
CN1	Wire management accessory	Size 16 Deutsch Male Pin	TE Connectivity	1060-16-0122	1
CN1	Wire management accessory	Size 20 Deutsch Male Pin	TE Connectivity	1060-20-0122	1
CN2	Connector	Female NTSEAL Automotive Connector Socket Cable Mount 20 Way, Solder Termination	TE Connectivity	2350890-1	1
1	Harness accessory	Expandable Braided PET Black Cable Sleeve, 15mm Diameter, 5m Length	RS PRO	408-205	1
CN2	Wire management accessory	Size 16 Deutsch Female Pin	TE Connectivity	1062-16-0122	1
CN2	Wire management accessory	Size 20 Deutsch Female Pin	TE Connectivity	1062-20-0122	1
CRIMP1	Connector	RS PRO Red Insulated Female Spade Connector, Receptacle, 4.8 x 0.5mm Tab Size, 0.5mm² to 1.5mm²	RS PRO	534-418	10
DRV1	Drive	PWM Power Control Module 9-28 V/DC, max. 10A	KEMO ELECTRONIC	M171	1
DRV2	Drive	PWM Power Control Module 9-28 V/DC, max. 10A	KEMO ELECTRONIC	M171	1
F1	Fuse holder	WAGO TOPJOB S Series Grey, 2.5mm², 1-Level, Push In Termination, Fused, CSA	Wago	2002-1681	1
F1	Fuse	3A Violet Mini Blade Car Fuse, 32V dc	RS Pro	563-712	1
FL1	Encoder	Seeed Studio Accessories G1&2" Water Flow Sensor	Seeed	314150005	1
FL1	Accessory				1
FS1	Float Switch	NC Float Switch, 59630 Series, Vertical, SPST-NC, 200 Vdc, 10 W	HAMLIN	59630-4-T-02-A	1
FS2	Float Switch	NO Float Switch, Float, 300mm Cable, Direct Load, 140V ac Max, 200V dc Max	RS Pro	519-242	1
H1	Indicator	LED module with integrated LED, 24 V AC/DC, red	Siemens	3SU1401-1BB20-1AA0	1
H2	Indicator	Banner K50L Series Green, Red, Yellow Beacon, 18 → 30 V dc, Base Mount, LED Bulb, IP67, IP69	Banner	K50LGRYPQ	1
H2	Wire management accessory	Straight Female 4 way M12 to Actuator/Sensor Cable, 1m	RS PRO	283-4880	1
H3	Indicator	LED module with integrated LED, 24 V AC/DC, blue	Siemens	3SU1401-1BB50-1AA0	1
HMI1	HMI	SIMATIC HMI MTP700, Unified Basic Panel, touch operation, 7" widescreen TFT display	Siemens	6AV2123-3GB32-0AW0	1
LED1	Indicator	LED Lighting Modules DC LINEAR 11.50"x0.7" 3000K CRI 80 W/ 4 CONNECTORS (32 LEDS	American Bright LED	AB-L29D06W304N2	1
MCB1	Circuit Breaker	Siemens SENTRON 5SY MCB, 1P, 3A Curve B	Siemens	5SY4103-7	1
NS1	Networking	Flat Cat5e LSOH Ethernet Patch Lead, 0.5m Black -	PRO SIGNAL	PSG90664	1
P1	Motor	COMET – Immersion Pump 24 V	Comet	1305.79.00	1
PLC1	PLC	CPU 1214C - 24 VDC PSU, 14 DI (24 VDC), 10 DQ (24 VDC), 2 AI (0-10V), 150kB	Siemens	6ES7214-1AG40-0XB0	1
PLC2	PLC	SM 1232 - 2 x Analogue Output 13 Bit	Siemens	6ES7232-4HB32-0XB0	1
PSU1	Power supply	AC-DC 24V PSU	MEAN WELL	GEM60I24-P1J	1
PX1	Proxy Switch	RS PRO Inductive Threaded Barrel Proximity Sensor, M12, 8 mm Detection, PNP NO, 10 → 30 V dc	RS Pro	206-6160	1
R1	Sensor	CFR0W4J0153KIT 15K Carbon Film Resistor 0.25W	Royal Ohm	CFR0W4J0153KIT	1
R1	Accessory	CFR0W4J0153KIT 15K Carbon Film Resistor 0.25W	Royal Ohm	CFR0W4J0153KIT	1
S1	EStop	Contact module with 1 contact element, 1 NC	Siemens	3SU1400-1AA10-1CA0	1
S2	EStop	Contact module with 1 contact element, 1 NC	Siemens	3SU1400-1AA10-1CA0	1
S3	Button	Contact module with 1 contact element, 1 NO	Siemens	3SU1400-1AA10-1BA0	1
S3	Pilot device accessory	Blue - Plastic illuminated push button with flat button, momentary Contact	Siemens	3SU1001-0AB50-0AA0	1
S3	Wire management accessory	Siemens Label Holder for Use with Labeling Plate 12.5 mm x 27 mm	Siemens	3SU1900-0AG10-0AA0	1
S4	EStop	Backing plate round, for emergency stop mushroom pushbutton, yellow: Emergency Stop	Siemens	3SU1900-0BC31-0DA0	1
S5	EStop	Emergency stop mushroom pushbutton, illuminated, 22 mm, round, plastic, red, 40 mm	Siemens	3SU10011HB200AA0	1
S6	Button	Button/LED Holder for 3 modules, plastic	Siemens	3SU1500-0AA10-0AA0	2
SV1	Solenoid valve	Proportional Solenoid Valve 239092, 2 port(s) , NC, 24 V dc, 1/2in	Burkert	239092	1
TH1	Thermocouple & RTD	Electronic PT100 RTD Sensor, 6mm Dia, 86mm Long, 4 Wire, G1/2, +150°C Max	IFM	TM4431	1
TT1	Temp. Transmitter	Evaluation unit for PT100/PT1000 temperature sensors	IFM	TP9237	1
TT1	Wire management accessory	Right Angle Female 4 way M12 to Unterminated Sensor Actuator Cable, 2m	RS PRO	212-1703	1
X1	Power Distribution Block	4-conductor through terminal block; 2.5 mm²; side and center marking; for DIN-rail 35 x 15 and 35 x 7.5; Push-in CAGE CLAMP®; 2,50 mm²; gray	Wago	2002-1401	7
X1	DIN rail accessory	7-Way 22 (TOPJOB S) Jumper for use with for use with Terminal Blocks	Wago	2002-407	3
X1	Terminal block accessory	249 Group Marker Carrier	Wago	249-119	4
X1	Terminal block accessory	Screwless end stop; 6 mm wide; for DIN-rail 35 x 15 and 35 x 7.5; grey	Wago	249-116	7
X2	Power Distribution Block	4-conductor through terminal block; 2.5 mm²; for DIN-rail 35 x 15 and 35 x 7.5; Push-in CAGE CLAMP®; 2,50 mm²; gray	Wago	2002-1401	7
X3-1-6	Power Distribution Block	4-conductor through terminal block; 2.5 mm²; for DIN-rail 35 x 15 and 35 x 7.5; Push-in CAGE CLAMP®; 2,50 mm²; gray	Wago	2002-1401	6
X3-1-6	Terminal block accessory	Marker Card, Horizontal, 1-10, White, Identification	Wago	248-502	1
X3-7-17	Power Distribution Block	2-conductor through terminal block; 2.5 mm²; for DIN-rail 35 x 15 and 35 x 7.5; Push-in CAGE CLAMP®; 2,50 mm²; gray	Wago	2002-1201	11
X3-7-17	Terminal block accessory	Marker Card, Horizontal, 11-20, White, Identification, Pack of 5, Each 10 Strips	Wago	248-503	1

Rev.	Date	Description	Appd. by	Status
1	02/06/2025	Cable Diameter Change	HA	Closed
A	03/05/2025	Initial Release	HA	Closed

Prj: IM0004-1

Prj nb: IM0004

Title: Parts List

Sheet nb. 11 of 12

Desg. by: HA

Matrix TSL
33 Gibbet Street
Halifax, UK
sales@matrixtsl.com
01422 252380

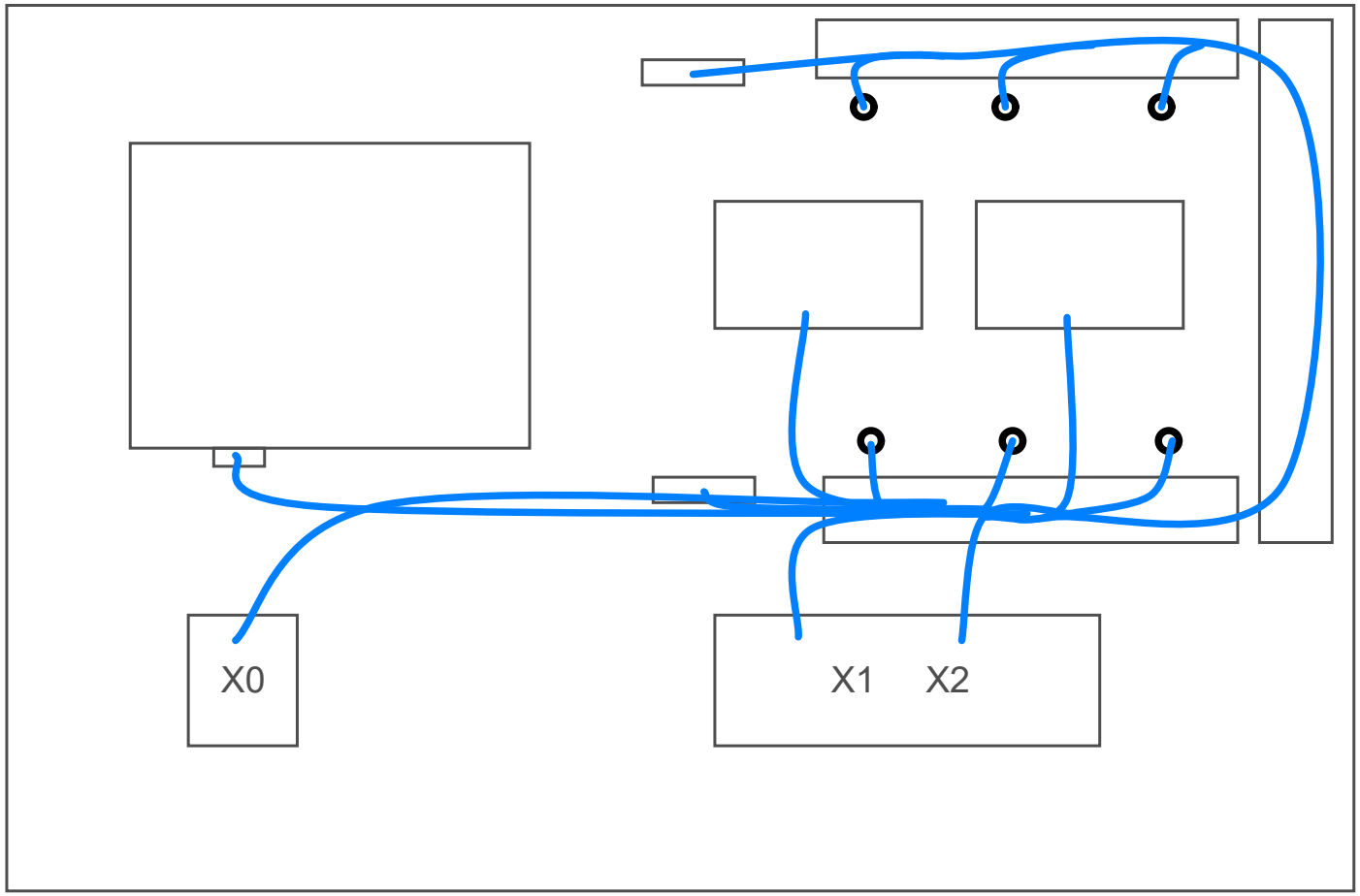

Rev.	Date	Description	Appd. by	Status
E	02/06/2025	Cable Diameter Change	HA	Closed
D	26/05/2025	Document Review	HA	Closed
C	19/05/2025	Formatting Adjustments	HA	Closed
B	12/05/2025	Minor Updates	HA	Closed
A	03/05/2025	Initial Release	HA	Closed

Prj: IM0004-1

Prj nb: IM0004

Title: Back Panel Wiring

Sheet nb. 12 of 12

Desg. by: HA

Matrix TSL

33 Gibbet Street
Halifax, UK
sales@matrixtsl.com
01422 252380